Conventional Fire Alarm Control Panel

Model No: Eagle 12

Features

- 12 Fixed Zones
- Supports up to 384 detectors
- Unlimited call points
- 1 “fire” and 1 “fault” relay outputs
- 4 monitored sounder outputs
- Active EOL allowing continuous monitoring of inputs
- Walk test
- LED indication
- Levels of access protected by means of security key
- Plastic box

Description

EAGLE12 is a conventional fire detection and indication panel that has 8 fixed and is expanded to 12 zones. EAGLE12 is based on a modular principle - a power unit, a control panel, zone/ sounder expanders, an indication module and battery space. A detailed LED indication shows the status of the system, divided in two groups - for technician level and for monitor and observer level. An appropriate mode for zone detector testing by a single person has been implemented - One Man Test. Control and indications can be doubled at a remote site up to 1000m away with the help of a repeater. The panel has been designed to operate with one 12 VDC battery back-up power, which reduces the costs by the value of one battery per system. The EAGLE12 is suitable for vast range of applications - big office buildings, schools, supermarkets and other with over 3000m2

Packing Details

Single packing box	1 unit of Eagle 12 Fire alarm panel, dimensions 490x395x150 mm
Carton packing box	5 units of Eagle 12 Fire alarm panel, dimensions 497x417x325 mm

Dimension Details

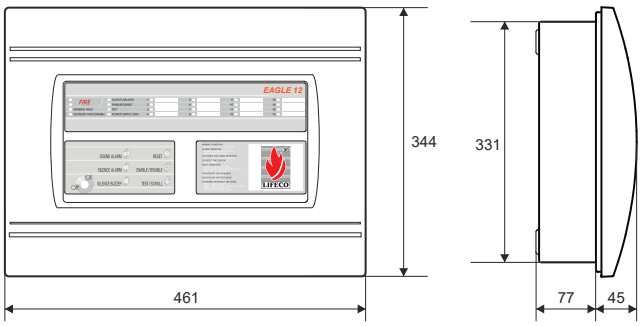

Technical & Environmental Specification

Main Power Supply	~230 ± 10%
Frequency	50/60Hz
Back-up Power Supply	1 battery, 12V/18Ah
Power availability	2A
Main Power supply fail consumption	260mA
Consumption from Battery in fire condition	720mA@4zone
Outputs (Sounder circuits on the control PCB module)	4; 24V / 0.3A Fuse
Output, FAULT Relay	1;1A@120VAC or 0.5A@2VDC
Output, Fire Relay	1;1A@120VAC or 0.5A@2VDC
Auxiliary output	24VDC/0.3A fuse
Fixed Zones	12
Detectors per zone/max. number of detectors	32/384
Multi language front panels	YES
Operating temperature	-5°C to +40°C
Relative humidity resistance	(93 ± 3)% @40°C
Weight (without battery)	~4kg

Connection Diagram

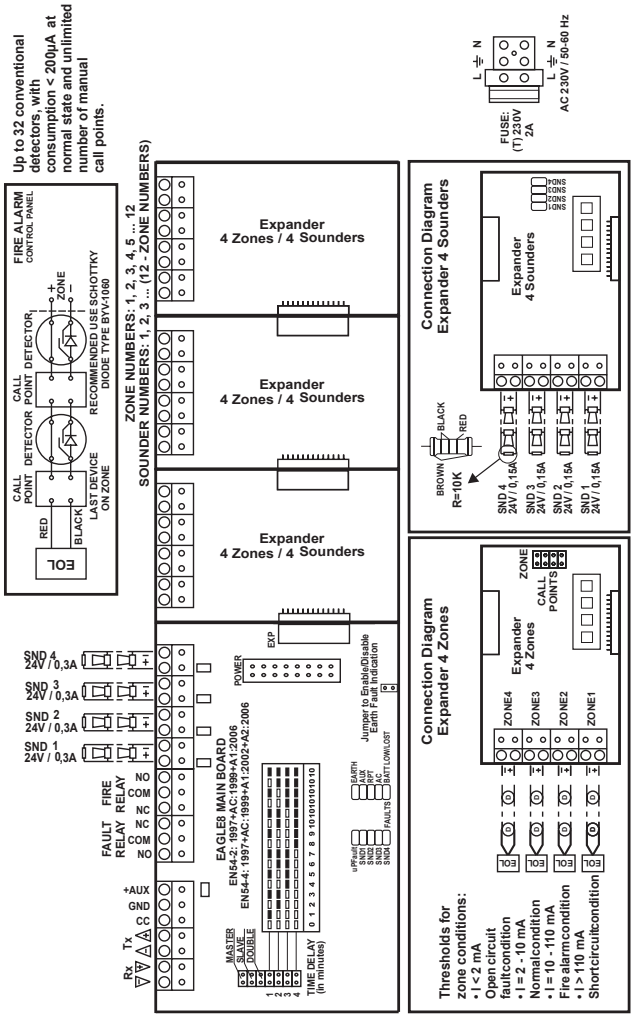

Specifications subject to change without notice (REV.01 - 2019)